Class 800 OS&Y Welded Bonnet Y Pattern Globe Valve A105N (API Trim 8) NACE

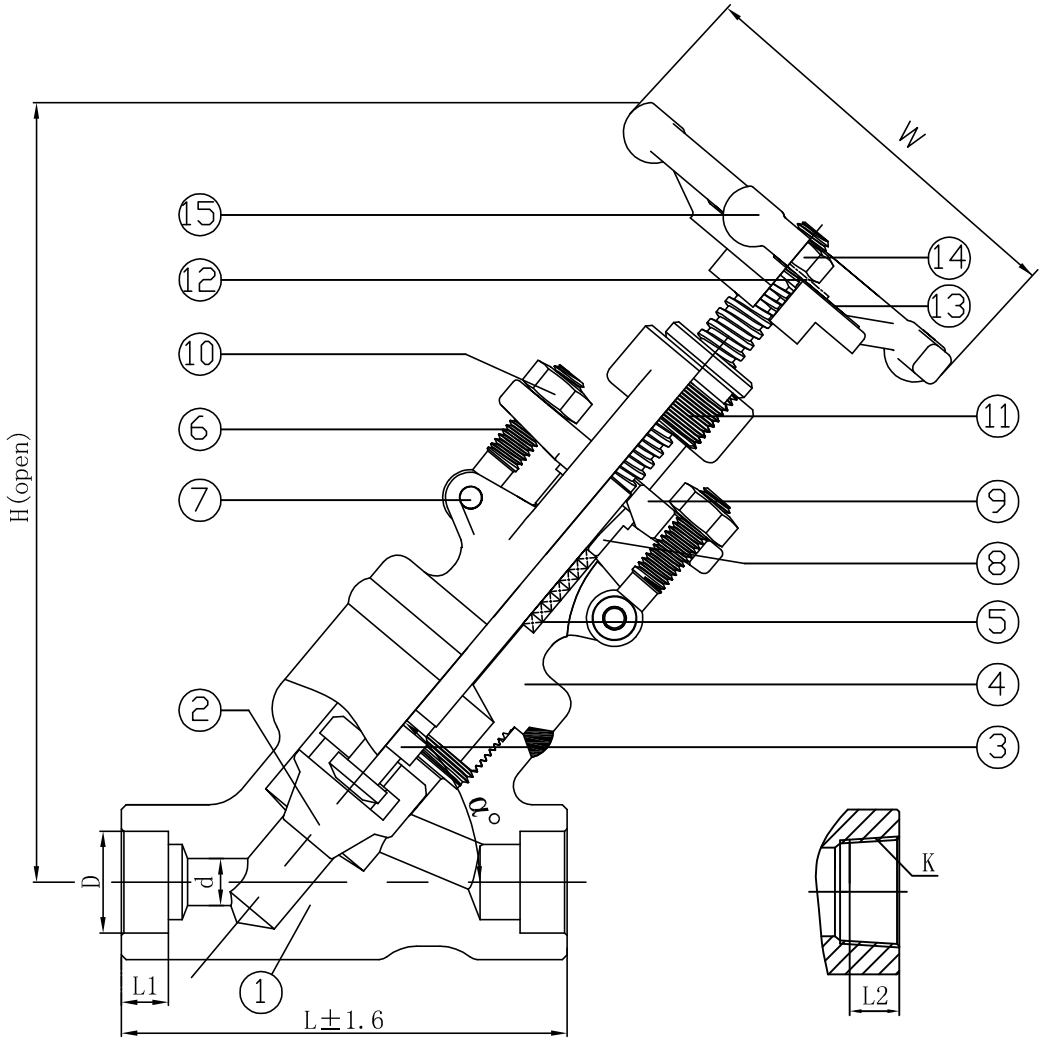

NO.	PART NAME	MATERIAL	QTY.
1	BODY	A105N+HF	1
2	DISC	A276-410	1
3	STEM	A276-410	1
4	BONNET	A105N	1
5	PACKING	GRAPHITE WITH CORROSION INHIBITOR & DIE FORMED RINGS	1 SET
6	GLAND BOLT	A193 B7M	2
7	GLAND BOLT PIN	A276 410	2
8	PACKING FLANGE	A276 420	1
9	GLAND FLANGE	WCB	1
10	NUT	A194 2HM	2
11	STEM NUT	A276 410	1
12	WASHER	A276 410	1
13	NAMEPLATE	STAINLESS STEEL	1
14	HAND WHEEL NUT	A108 1020	1
15	HAND WHEEL	A197	1

VALVE SIZE DN	VALVE SIZE IN	L	d	D	L1	α°	H	W	K	L2
15	½″	98	ø10	ø21.8	10	55°	240	ø100	½″	15.5
20	¾″	98	ø13	ø27.2	13	55°	240	ø100	¾″	16.5
25	1″	120	ø18	ø33.9	13	55°	290	ø125	1″	19.5
32	1¼″	140	ø23	ø42.7	13	60°	302	ø160	1¼″	21
40	1½″	140	ø29	ø48.8	13	60°	368	ø160	1½″	21
50	2″	170	ø35	ø61.2	16	45°	370	ø180	2″	23

NO.	DATE	DESCRIPTION	PRP'D	REV'D	APP'D
1	1/1/12	ISSUED FOR PROPOSAL			

MARKING SYSTEM	MSS-SP-25	INSPECTION & TEST: API 598		
FACE TO FACE	API 602	SHELL	HYDRO	2975PSI
WALL THICKNESS	BS1868	SEAT	AIR	80PSI
DESIGNED	API 602	BACK SEAT	HYDRO	2175PSI
		NACE MR 0175		

WILLIAM E. WILLIAMS VALVE CORPORATION
WWW.WILLIAMSVALVE.COM
38-52 REVIEW AVENUE
LONG ISLAND CITY, NY 11101
TEL: 718-392-1660
FAX: 718-729-5106

TITLE: FORGED STEEL WELDED BONNET
Y PATTERN GLOBE VALVE - CLASS 800 - API TRIM 8

MATERIAL: A105N
UNITS: Inch, mm
CLASS: 800
DATE: 01/01/12
SCALE: N.T.S.
SIZE: 1/2 - 2"
FIG. No.: F802YTXS-2N WB (sw. by thr. ends) F802YSW-2N WB (sw. ends) F802YT-2N WB (thr. ends)
DRAWN BY: F.J.
CHK'D & APR'D BY: R.P.
REV: 1
DWG No.: 50YGL120110