Class 800 OS&Y Gate Valve A105N (API Trim 8) NACE

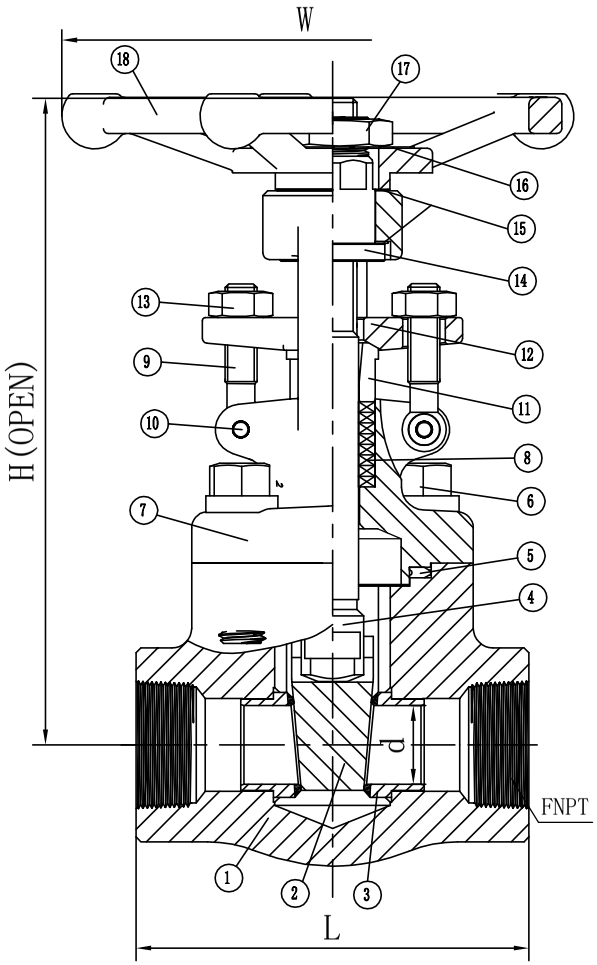

NO.	Part	Material	NO.	Part	Material
10	GLAND BOLT PIN	A276 304			
9	GLAND BOLT	A193 B7M			
8	PACKING	Graphite(API 622)	18	HAND WHEEL	A197
7	BONNET	A105N	17	HAND WHEEL NUT	A108 1020
6	BONNET BOLT	A193 B7M	16	NAMEPLATE	SS
5	GASKET	304+Graphite	15	WASHER	A276 410
4	STEM	A276 410	14	STEM NUT	A276 410
3	SEAT RING	A276 410+STL	13	NUT	A194 2HM
2	WEDGE	A276 410	12	GLAND FLANGE	A105N
1	BODY	A105N	11	GLAND	A276 420

PRESSURE RATING: 1975

ITEM NO.	SIZE	Dimension Unit: mm					Remarks
		L±1.6	d±0.5	FNPT	H±5	W±5	
	1/2"	79.0	Ø13.0	1/2"	157.0	100.0	
	3/4"	92.0	Ø13.0	3/4"	157.0	100.0	
	1"	111.0	Ø18.0	1"	185.0	120.0	
	1¼"	120.0	Ø24.0	1¼"	226.0	160.0	
	1½"	120.0	Ø29.0	1½"	241.0	160.0	
	2"	140.0	Ø36.5	2"	273.0	220.0	

NO.	DATE	DESCRIPTION	PRP'D	REV'D	APP'D
1	09/11/19	RELEASED	F.J.	E.C.	E.C.

MARKING SYSTEM	MSS-SP-25	INSPECTION & TEST: API 598		
FACE TO FACE	API 602	SHELL	HYDRO	2975PSI
WALL THICKNESS	API 602	BACK SEAT	HYDRO	2175PSI
DESIGNED	API 602	SEAT	HYDRO	2175PSI
QUALIFIED API 624		SEAT	AIR	80PSI
		NACE MR 0175		

WILLIAM E. WILLIAMS VALVE CORPORATION
WWW.WILLIAMSVALVE.COM
38-52 REVIEW AVENUE
LONG ISLAND CITY, NY 11101
TEL: 718-392-1660
FAX: 718-729-5106

TITLE:	FORGED STEEL BOLTED BONNET GATE VALVE - CLASS 800 - API TRIM 8		
MATERIAL:	A105N	UNITS:	Inch, mm
CLASS:	800	DATE: 09/11/19	SCALE: N.T.S.
SIZE:	1/2" - 2"		FIG. No.: F80T2N
DRAWN BY:	F.J.		
CHK'D & APR'D BY:	E.C.	REV: 1	DWG No.: XXXX