Class 1500 OS&Y Welded Bonnet Y Pattern Globe Valve F316 (API Trim 12) NACE

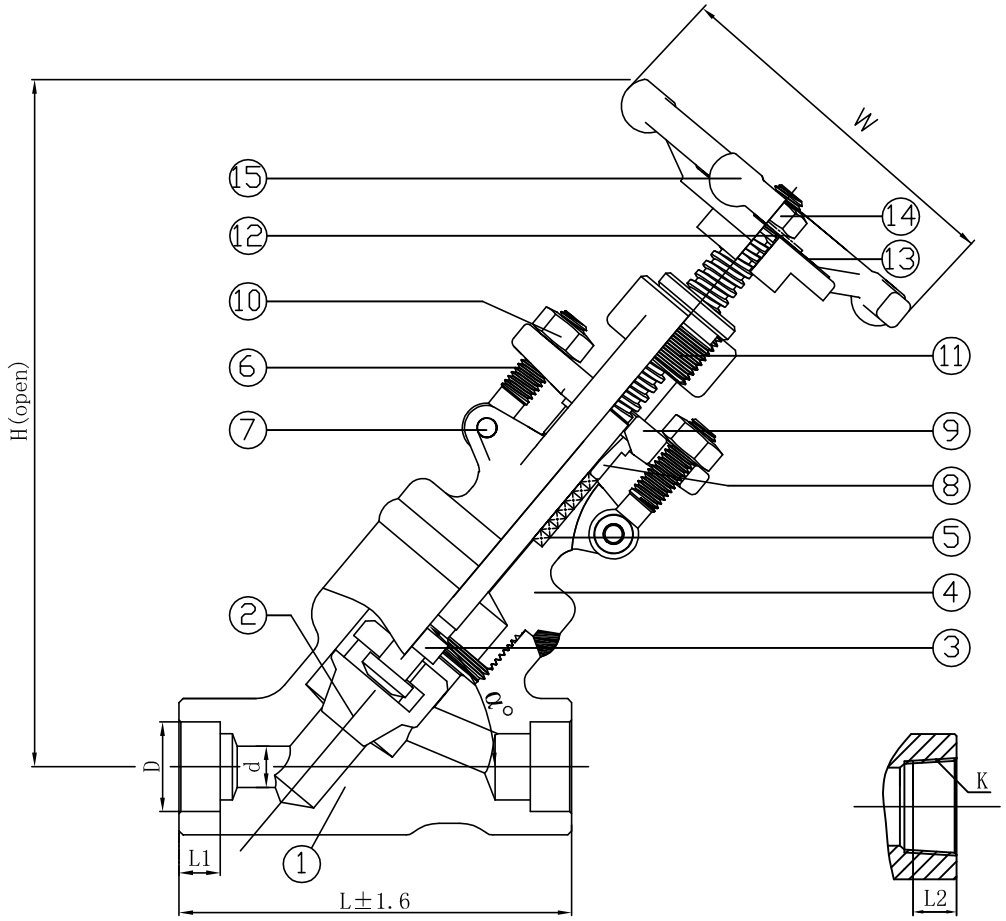

BILL OF MATERIALS

NO.	PART NAME	MATERIAL	QTY.
1	BODY	A182-F316 + HF	1
2	DISC	A276-F316	1
3	STEM	A276-F316	1
4	BONNET	F316	1
5	PACKING	GRAPHITE WITH CORROSION INHIBITOR & DIE FORMED RINGS	1 SET
6	GLAND BOLT	A193 B8M	2
7	GLAND BOLT PIN	A276-F316	2
8	PACKING FLANGE	A276-F316	1
9	GLAND FLANGE	F316	1
10	NUT	A194 8M	2
11	STEM NUT	A276 410	1
12	WASHER	A276 410	1
13	NAMEPLATE	STAINLESS STEEL	1
14	HAND WHEEL NUT	A108 1020	1
15	HAND WHEEL	A197	1

VALVE SIZE DN	VALVE SIZE IN	L	d	D	L1	α°	H	W	K	L2
15	½″	120	ϕ10	ϕ21.8	10	55°	170	ϕ125	½″	15.5
20	¾″	120	ϕ13	ϕ27.2	13	55°	195	ϕ125	¾″	16.5
25	1″	140	ϕ18	ϕ33.9	13	55°	235	ϕ160	1″	19.5
32	1¼″	140	ϕ23	ϕ42.7	13	60°	278	ϕ160	1¼″	21
40	1½″	170	ϕ29	ϕ48.8	13	60°	278	ϕ180	1½″	21
50	2″	190	ϕ35	ϕ61.2	16	45°	310	ϕ200	2″	23

NO.	DATE	DESCRIPTION	PRP'D	REV'D	APP'D
1	1/1/12	ISSUED FOR PROPOSAL			

MARKING SYSTEM	MSS-SP-25	INSPECTION & TEST: API 598		
FACE TO FACE	API 602	SHELL	HYDRO	5400PSI
WALL THICKNESS	BS1868	SEAT	AIR	80PSI
DESIGNED	API 602	BACK SEAT	HYDRO	3975PSI
		NACE MR 0175		

WILLIAM E. WILLIAMS VALVE CORPORATION
WWW.WILLIAMSVALVE.COM
38-52 REVIEW AVENUE
LONG ISLAND CITY, NY 11101
TEL: 718-392-1660
FAX: 718-729-5106

TITLE: FORGED STAINLESS STEEL WELDED BONNET Y PATTERN GLOBE VALVE - CLASS 1500 - API TRIM 12

MATERIAL: F316 | UNITS: Inch, mm

CLASS: 1500 | DATE: 01/01/12 | SCALE: N.T.S.

SIZE: 1/2 - 2" | FIG. No.: F1502YTXS-62N 316WB (sw. by thr. ends) F1502YSW-62N 316 WB (sw. ends) F1502YT-62N 316 WB (thr. ends)

DRAWN BY: F.J.

CHK'D & APR'D BY: R.P. | REV: 1 | DWG No.: 50YGL120206