Class 800 OS&Y BB Gate Valve F316 (API Trim 12) NACE

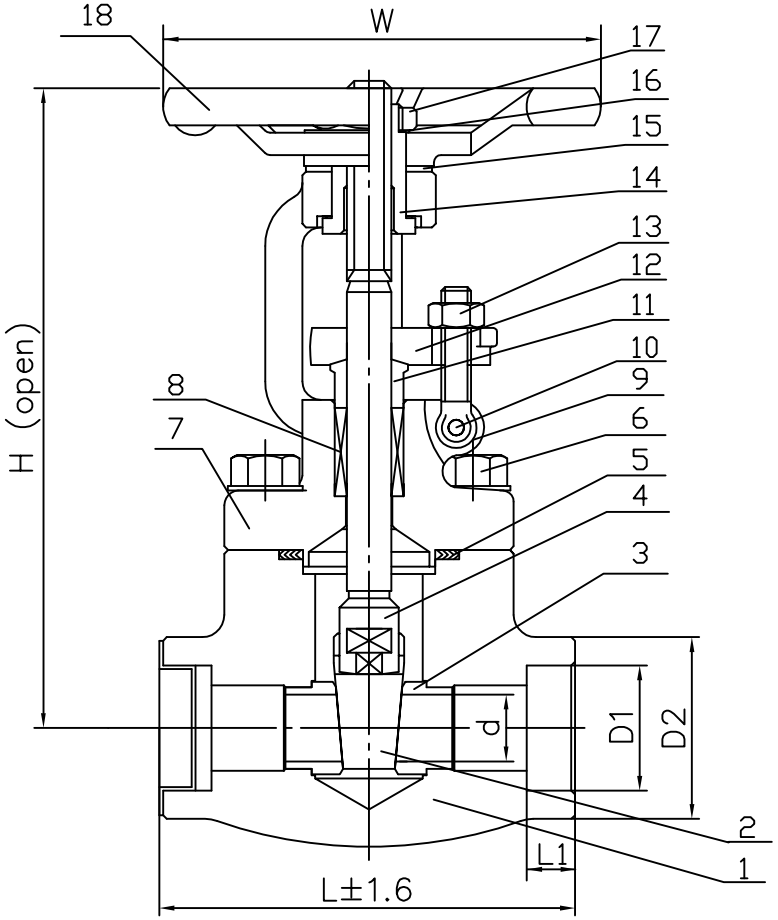

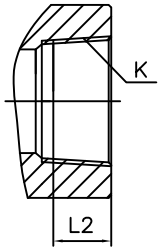

BILL OF MATERIALS

NO.	PART NAME	MATERIAL	QTY
1	Body	A182 F316	1
2	Disc	A276–F316	1
3	Seat ring	A276–F316 + HF	2
4	Stem	A276–F316	1
5	Gasket	F316+Graphite	1
6	Bonnet Bolt	A193–B8M	4
7	Bonnet	F316	1
8	Packing	GRAPHITE WITH CORROSION INHIBITOR AND DIE FORMED RINGS	1Set
9	Gland Bolt	A193–B8M	2
10	Gland Bolt Pin	A276–F316	2
11	Packing Flange	A276–F316	1
12	Gland Flange	F316	1
13	Nut	A194–8M	2
14	Stem Nut	A276–410	1
15	Washer	A276–410	2
16	Nameplate	STAINLESS STEEL	1
17	Hand Wheel Nut	A194–8MA	1
18	Hand Wheel	A197	1

SIZE DN	SIZE in	d	L	W	D2	D1	H(open)	L1	K	L2
15	1/2	ø10	79	ø100	ø35	ø21.7	166	10	1/2	15.5
20	3/4	ø13	92	ø100	ø42	ø27.2	169	13	3/4	16.5
25	1	ø18	111	ø125	ø51	ø33.9	193	13	1	19.5
32	1 1/4	ø22	120	ø160	ø60	ø42.7	230	13	1 1/4	21
40	1 1/2	ø29	120	ø160	ø64	ø48.8	246	13	1 1/2	21
50	2	ø36	140	ø180	ø80	ø61.2	283	16	2	23

NO.	DATE	DESCRIPTION	PRP'D	REV'D	APP'D
2	1/1/12	ISSUED FOR PROPOSAL	F.J.	R.P.	R.P.
1	1/1/12	ISSUED FOR PROPOSAL			

MARKING SYSTEM	MSS–SP–25	INSPECTION & TEST: API 598		
FACE TO FACE	API 602	SHELL	HYDRO	3046PSI
WALL THICKNESS	BS1868	SEAT	AIR	80PSI
DESIGNED	API 602	BACK SEAT	HYDRO	2234PSI
		NACE MR 0175		

WILLIAM E. WILLIAMS VALVE CORPORATION
WWW.WILLIAMSVALVE.COM
38-52 REVIEW AVENUE
LONG ISLAND CITY, NY 11101
TEL: 718-392-1660
FAX: 718-729-5106

TITLE: FORGED STAINLESS STEEL BOLTED BONNET GATE VALVE - CLASS 800 - API TRIM 12

MATERIAL: F316
UNITS: Inch, mm
CLASS: 800
DATE: 01/01/12
SCALE: N.T.S.
SIZE: 1/2 - 2"
FIG. No.: FS80TXS-62N 316 (sw. by thr. ends) FS80SW-62N 316 (sw. ends) FS80T-62N 316 (thr. ends)
DRAWN BY: F.J.
CHK'D & APR'D BY: R.P.
REV: 2
DWG No.: 50GA120071