Wm. E. Williams No. S151F6-316 Class 150 R.F. Swing Check Valve ASTM A 351 CF8M (API TRIM 10)

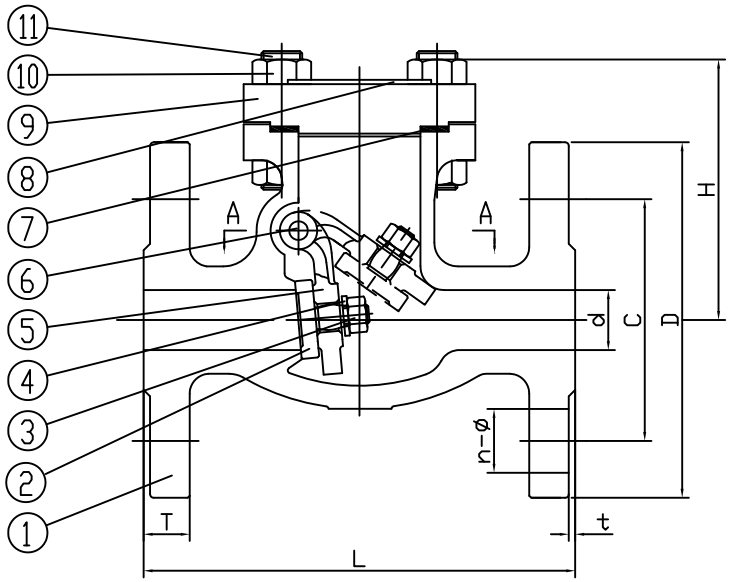

BILL OF MATERIAL

NO.	PART NAME	MATERIAL	Q'TY
1	BODY	A351-CF8M	1
2	DISC	A351-CF8M	1
3	NUT	A351-CF8M	1
4	WASHER	A276-316	1
5	HINGE	A351-CF8M	1
6	HINGE PIN	A276-316	1
7	GASKET	PTFE	1
8	NAME PLATE	A276-304	1
9	BONNET	A351-CF8M	1
10	NUT	A194-8	1SET
11	BOLT	A193-B8	1SET
12	PLUG	A276-316	1
13	GASKET	PTFE	1

A-A VIEW

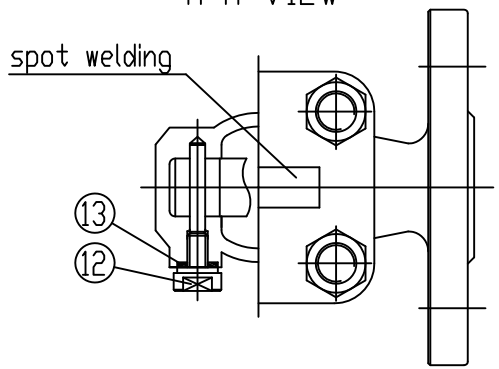

SIZE	d	L	D	C	g	T	t	H	n-ø
1/2"	15	108	89	60.5	35	11	1.6	79.5	4-16
3/4"	20	117	98	70.0	43	11.5	1.6	84	4-16
1"	25	127	108	79.5	51	12	1.6	89	4-16
11/2"	40	165	127	98.5	73	15	1.6	102	4-16
2"	50	203	152	120.5	92	16	1.6	113.5	4-19

WILLIAM E. WILLIAMS VALVE CORPORATION
WWW.WILLIAMSVALVE.COM
38-52 REVIEW AVENUE
LONG ISLAND CITY, NY 11101
TEL: 718-392-1660
FAX: 718-729-5106

TITLE: STAINLESS STEEL SWING CHECK VALVE
CLASS 150 - API TRIM 10

NO.	DATE	DESCRIPTION	PRP'D	REV'D	APP'D
1	8/3/15	RELEASED	F.J.	R.P.	R.P.

MARKING SYSTEM	MSS-SP-25	INSPECTION & TEST: API 598		
DIM.OF FLANGE	ANSI B16.5	SHELL	HYDRO	425PSI
FACE TO FACE	ANSI B16.10	SEAT	AIR	80PSI
		BACK SEAT	HYDRO	325PSI
DESIGNED	API 594, ANSI B16.34			

MATERIAL: A351-CF8M			UNITS: Inch, mm
CLASS: 150	DATE: 08/03/15		SCALE: N.T.S.
SIZE: 1/2" - 2"			FIG. No.: S151F6-316
DRAWN BY: F.J.			
CHK'D & APR'D BY: R.P.		REV: 1	DWG No.: 11SC120002-T-35