Wm. E. Williams No. SMSPL-6 Class 150 Emergency Shut-Off Valve ASTM A351-CF8M (API Trim 10)

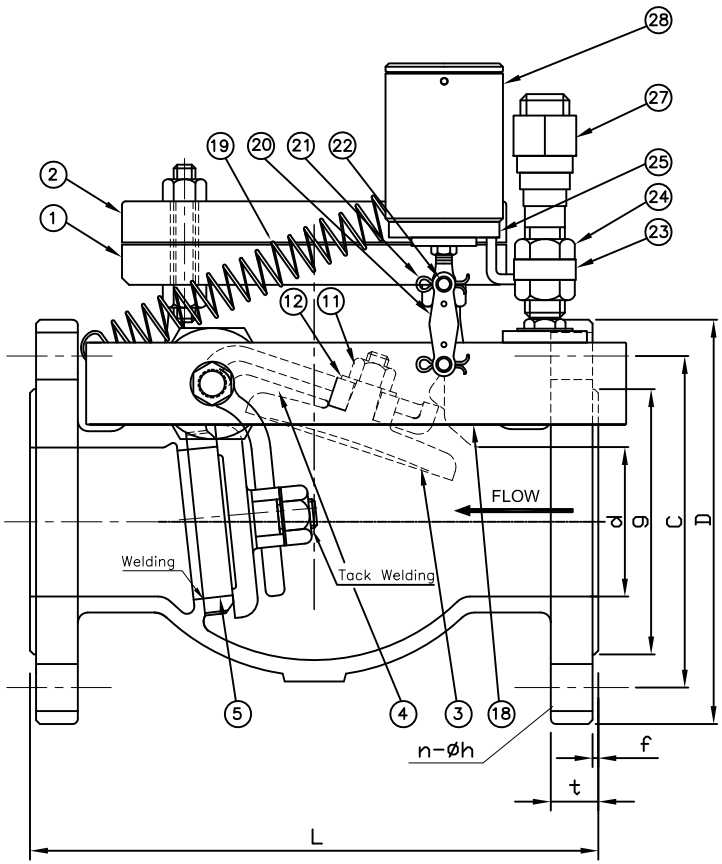

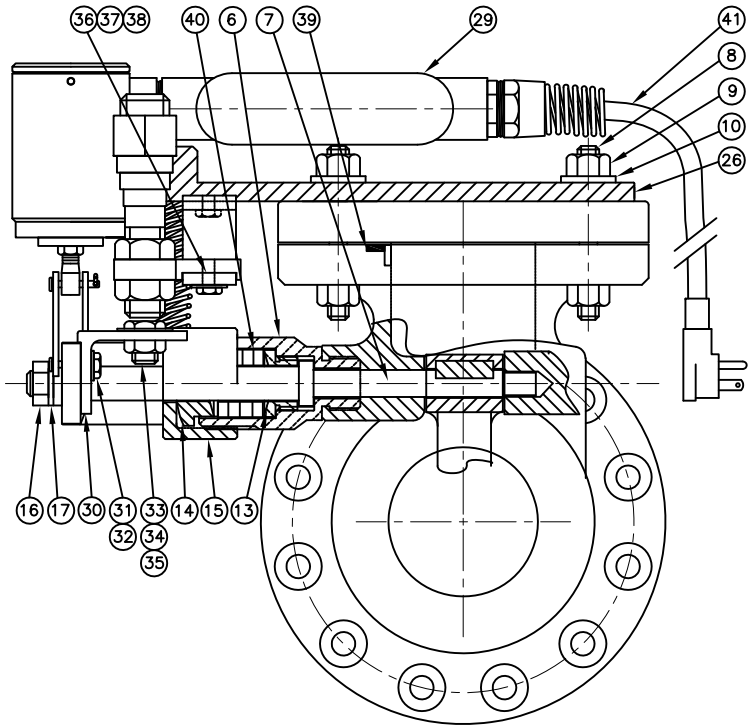

SIZE	d	L	D	C	g	t	f	n-h
2.00	2.00	8.00	6.00	4.75	3.625	0.63	0.060	4-0.75
2.50	2.50	8.50	7.00	5.50	4.125	0.69	0.060	4-0.75
3.00	3.00	9.50	7.50	6.00	5.000	0.75	0.060	4-0.75
4.00	4.00	11.50	9.00	7.50	6.187	0.94	0.060	8-0.75
5.00	5.00	13.00	10.00	8.50	7.320	0.94	0.060	8-0.87
6.00	6.00	14.00	11.00	9.50	8.500	1.00	0.060	8-0.87
8.00	8.00	19.50	13.50	11.75	10.62	1.13	0.060	8-0.87
10.00	10.00	24.50	16.00	14.25	12.75	1.19	0.060	12-1.00
12.00	12.00	27.50	19.00	17.00	15.00	1.25	0.060	12-1.00
14.00	13.25	31.00	21.00	18.75	16.25	1.38	0.060	12-1.12
16.00	15.25	34.00	23.50	21.25	18.50	1.44	0.060	16-1.12
18.00	17.25	38.50	25.00	22.75	21.00	1.57	0.060	16-1.25
20.00	19.25	38.50	27.50	25.00	23.00	1.69	0.060	20-1.12
24.00	23.25	51.00	32.00	29.50	27.25	1.88	0.060	20-1.37

BILL OF MATERIAL

NO.	PART NAME	MATERIAL	Q'TY
1	BODY	ASTM A351-CF8M	1
2	COVER	ASTM A351-CF8M	1
3	DISC	ASTM A351-CF8M	1
4	ARM	ASTM A216-WCB	1
5	SEAT RING	A105N + HF	1
6	STUFFING HOUSE	A276-316	1
7	SHAFT	A276-316	1
8	COVER BOLT	ASTM A193 Gr B8	1SET
9	COVER NUT	ASTM A194 Gr 8	1SET
10	WASHER	A240-316	2
11	DISC NUT	ASTM A194 Gr 8	1
12	WASHER	A240-316	1
13	RETAINER	A276-316	1
14	GLAND	316	1
15	PACKING NUT	316	1
16	LEVER NUT	ASTM A194 Gr 8	1
17	WASHER	A240-316	1
18	LEVER	304 SS	1
19	SPRING	SS	1
20	FUSIBLE LINK	165°F	2
21	PIN	S.S 18-8	2
22	LOCK PIN	S.S 316	2
23	LIMIT SWITCH BRACKET	S.S 316	1
24	LOCK NUT	S.S 316	2
25	MAGNETIC DISC	CARBON STEEL	1
26	MOUNTING BRACKET	SS	1
27	LIMIT SWITCH (SEE NOTE)	S.S 316	1Set
28	ELECTRO MAGNET		1
29	CONDUIT BODY	ALUMINUM	1
30	LEVER/MAGNETIC BOLT BRACKET	SS	1
31	BOLT	ASTM A193 Gr B8	1
32	WASHER	A240-316	1
33	MAGNETIC TRIGGER BOLT	S.S 316	1
34	WASHER	A240-316	1
35	NUT	ASTM A194 Gr 8	1
36	LIMIT SWITCH BRACKET	CARBON STEEL	1
37	BOLT	ASTM A193 Gr B8	2
38	WASHER	A240-316	2
39	GASKET	GRAPHITE	1
40	PACKING	GRAPHITE WITH CORROSION INHIBITOR AND DIE FORMED RINGS	1
41	PLUG		1

NOTE: LIMIT SWITCH (ITEM 27) AND HARDWARE (ITEMS 30 – 38) ARE OPTIONAL.

WILLIAM E. WILLIAMS VALVE CORPORATION
WWW.WILLIAMSVALVE.COM
38-52 REVIEW AVENUE
LONG ISLAND CITY, NY 11101
TEL: 718-392-1660
FAX: 718-729-5106

TITLE: STAINLESS STEEL EMERGENCY SHUT OFF VALVE WITH SPRING - CLASS 150 - API TRIM 10

NO.	DATE	DESCRIPTION	PRP'D	REV'D	APP'D
1	5/17/13	RELEASED	F.J.	R.P.	R.P.

MARKING SYSTEM	MSS-SP-25	INSPECTION & TEST: API 598			
DIM.OF FLANGE	ANSI B16.5	SHELL	HYDRO	425PSI	
FACE TO FACE	ANSI B16.10	SEAT	AIR	80PSI	
WALL THICKNESS	ANSI B16.34	BACK SEAT	HYDRO	325PSI	
DESIGNED	API 603				

MATERIAL: ASTM A216 Gr. WCB		UNITS: Inch, mm	
CLASS: 150	DATE: 05/17/13	SCALE: N.T.S.	
SIZE: 2" - 24"		FIG. No.: SMSPL-6	
DRAWN BY: F.J.			
CHK'D & APR'D BY: R.P.	REV: 1	DWG No.: 11ESOV120039	