Wm. E. Williams No. SN20T6 316 Class 200 WOG NRS Gate Valve ASTM A351 CF8M (API TRIM 10)

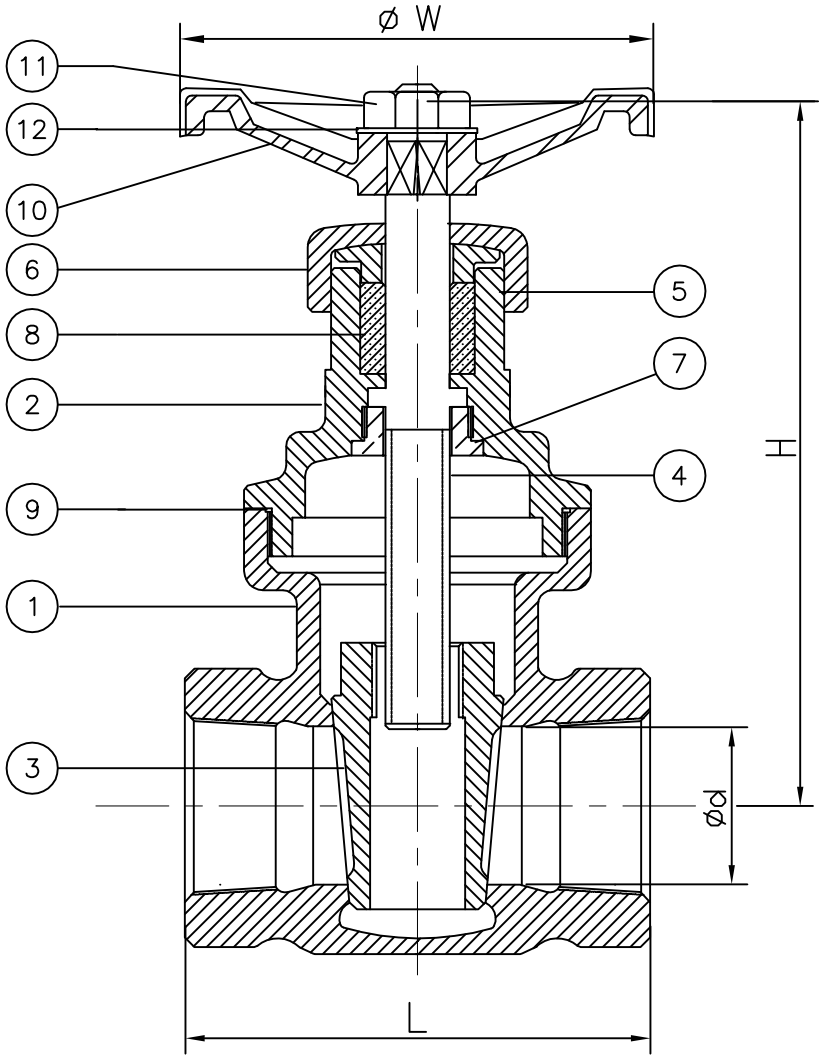

BILL OF MATERIAL		
NO.	PART NAME	MATERIAL
1	BODY	A351–CF8M
2	BONNET	A351–CF8M
3	DISC	A182 F316
4	STEM	A182 F316
5	GLAND	A182 F316
6	GLAND NUT	A351–CF8M
7	RETAINER BUSHING	A182 F316
8	PACKING	TEFLON PTFE
9	GASKET	TEFLON PTFE
10	HANDWHEEL	A126
11	HANDWHEEL HEXNUT	A276–304
12	I.D. LABEL	ALUMINUM

FEATURES:

- THREADED BONNET
- INTEGRAL SEATS
- NON RISING STEM
- OS&Y AVAILABLE

SIZE	L	d	W	H
1/2"	2.01	0.59	2.64	3.07
3/4"	2.21	0.79	2.64	3.27
1.00"	2.50	0.98	2.95	3.54
11/4"	2.80	1.26	2.95	3.82
11/2"	3.02	1.57	3.39	4.06
2.00"	3.41	1.97	3.98	4.65

WILLIAM E. WILLIAMS VALVE CORPORATION
WWW.WILLIAMSVALVE.COM
38-52 REVIEW AVENUE
LONG ISLAND CITY, NY 11101
TEL: 718-392-1660
FAX: 718-729-5106

TITLE: STAINLESS STEEL WOG NRS GATE VALVE
THREADED ENDS - CLASS 200 - API TRIM 10

NO.	DATE	DESCRIPTION	PRP'D	REV'D	APP'D
1	2/12/13	RELEASED	F.J.	R.P.	R.P.

MARKING SYSTEM	MSS-SP-25	INSPECTION & TEST: API 598	
THREADED ENDS	ANSI B 2.1	SHELL	HYDRO 300PSI
		SEAT	AIR N/A
		BACK SEAT	HYDRO 220PSI

MATERIAL: A351-CF8M			UNITS: Inch, mm
CLASS: 200	DATE: 02/12/13		SCALE: N.T.S.
SIZE: 1/2" - 2"			FIG. No.: SN20T6 316
DRAWN BY: F.J.			
CHK'D & APR'D BY: R.P.	REV: 1		DWG No.: 11NRSGA120036