Class 800 OS&Y Extended BB Cryogenic Globe Valve F316L (API Trim 12) NACE

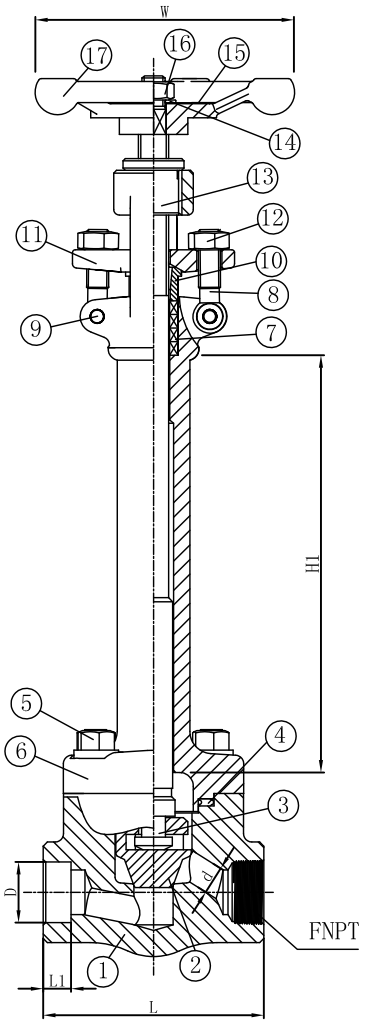

BILL OF MATERIALS

NO.	PART NAME	MATERIAL	QTY
1	Body	A182 F316L + HF	1
2	Disc	A276–F316	1
3	Stem	A276–F316	1
4	Gasket	F316 + Graphite	1
5	Bonnet Bolt	A193–B8M	4
6	Bonnet	A182 F316L	1
7	Packing	GRAPHITE WITH CORROSION INHIBITOR AND DIE FORMED RINGS	1Set
8	Pin	A276–316	2
9	Eyebolt	A276–316	2
10	Packing Gland	A276–316	1
11	Gland Flange	A182 F316L	1
12	Nut	A194–8M	2
13	Stem Nut	A276–410	1
14	Washer	A276–410	1
15	Nameplate	STAINLESS STEEL	1
16	Hand Wheel Nut	A194–8M	1
17	Hand Wheel	A197	1

Valve Size in	L	d	L1	D	W	H1
1/2	79	ø10	10	ø21.7	ø100	250
3/4	92	ø13	13	ø27.1	ø100	250
1	111	ø18	13	ø33.8	ø125	250
1 1/4	120	ø24	13	ø42.7	ø160	250
1 1/2	152	ø29	13	ø48.8	ø160	250
2	172	ø36.5	16	ø61.1	ø180	250

NO.	DATE	DESCRIPTION	PRP'D	REV'D	APP'D
1	7/9/15	RELEASED	F.J.	R.P.	R.P.

MARKING SYSTEM	MSS–SP–25	INSPECTION & TEST: API 598		
FACE TO FACE	API 602	SHELL	HYDRO	2400PSI
WALL THICKNESS	API 602	SEAT	AIR	N/A
DESIGNED	API 602	BACK SEAT	HYDRO	1775PSI
		NACE MR 0175		

WILLIAM E. WILLIAMS VALVE CORPORATION
WWW.WILLIAMSVALVE.COM
38-52 REVIEW AVENUE
LONG ISLAND CITY, NY 11101
TEL: 718-392-1660
FAX: 718-729-5106

TITLE: FORGED STAINLESS STEEL EXTENDED BOLTED BONNET CRYOGENIC GLOBE VALVE - CLASS 800 - API TRIM 12

MATERIAL: F316L
UNITS: Inch, mm
CLASS: 800
DATE: 07/09/15
SCALE: N.T.S.
SIZE: 1/2 - 2"
FIG. No.: FS802TXS-62N 316L EB (sw. by thr. ends) FS802SW-62N 316L EB (sw. ends) FS802T-62N 316L EB (thr. ends)
DRAWN BY: F.J.
CHK'D & APR'D BY: R.P.
REV: 1
DWG No.: 50GL120403